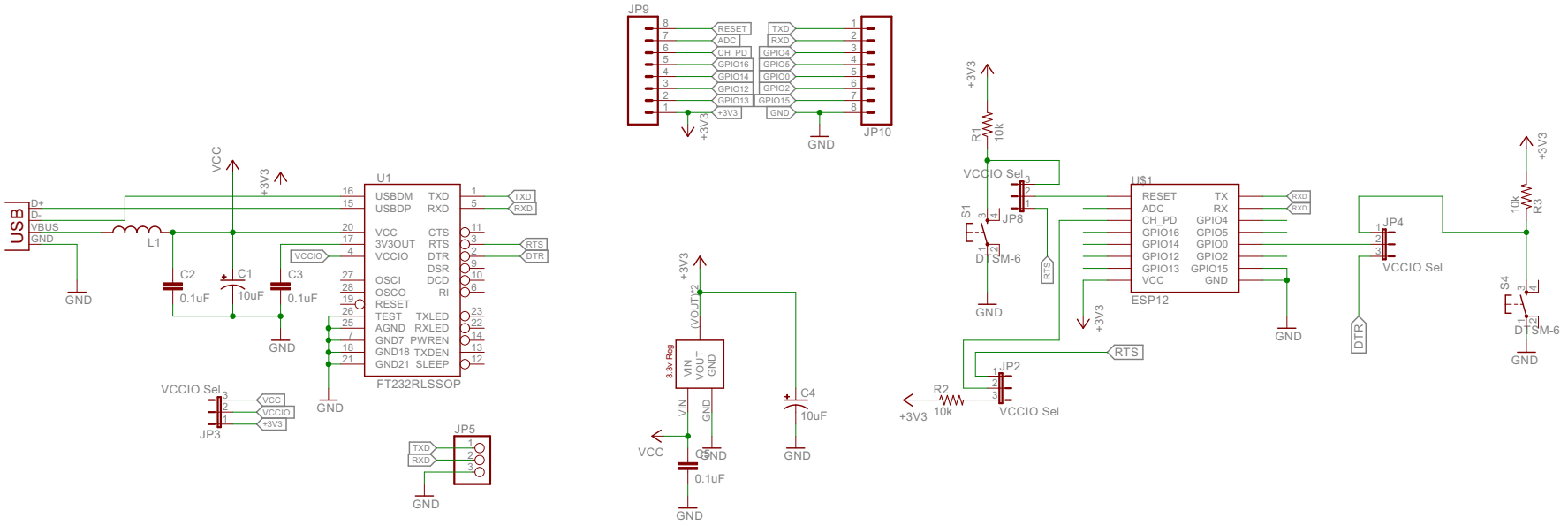

	nodeLHC
	24/07/2015 17:39:33
	Sheet: 1/1